DRAWING NUMBER:
SDM252JCAERO0537

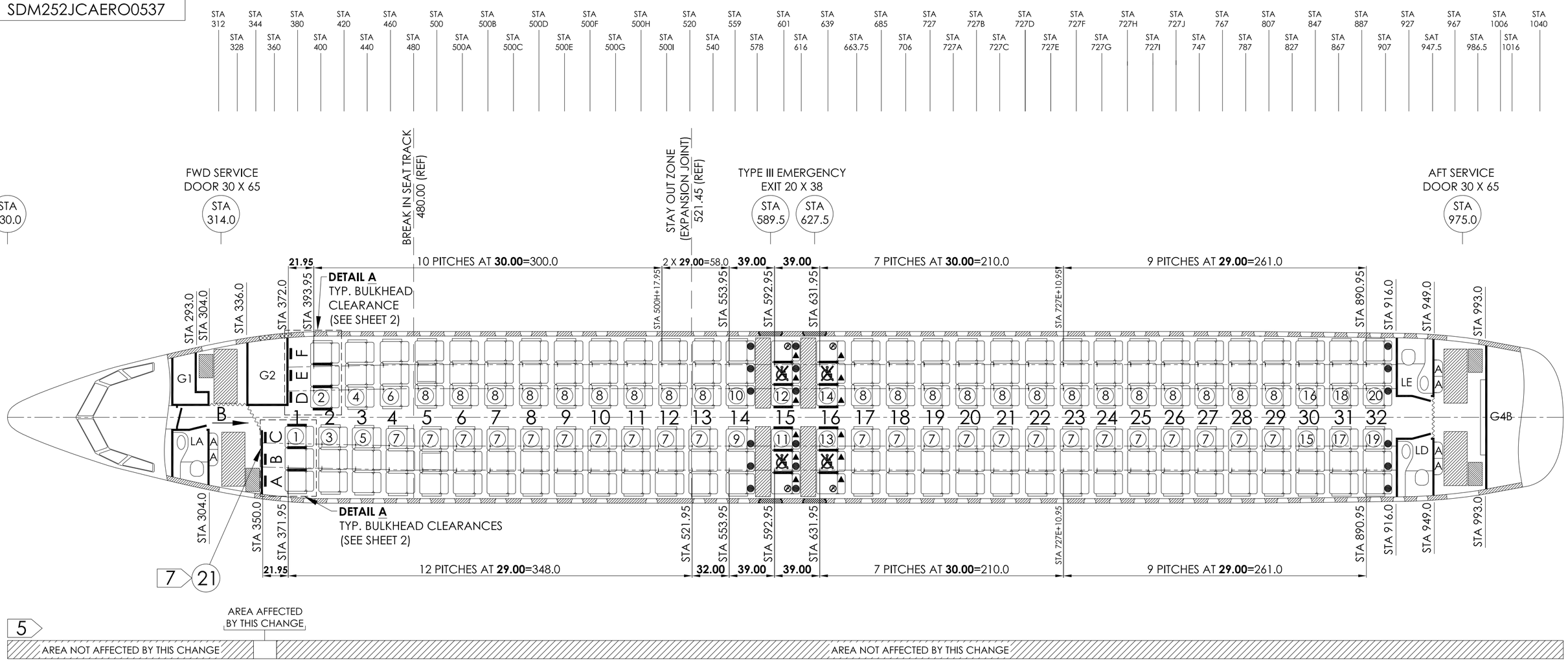

1 -101 INSTALLATION

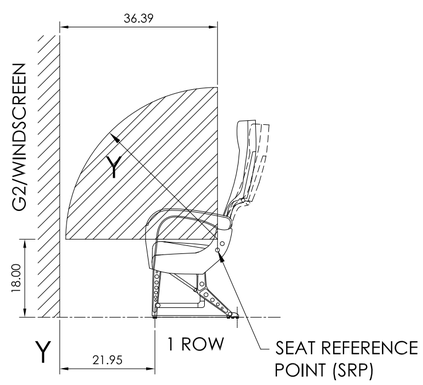

MINIMUM REQUIRED BULKHEAD CLEARANCE
35.00
(MEASURED FROM SEAT REFERENCE POINT)

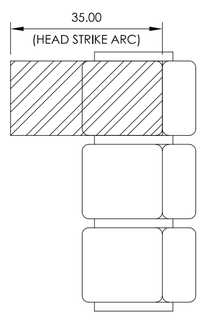

TYPICAL HEAD STRIKE ZONE
(AT EACH PAX PLACE - AFT OF BULKHEADS OR FIXED STRUCTURE)

DETAIL A

TYPICAL SEAT TO BULKHEAD CLEARANCES

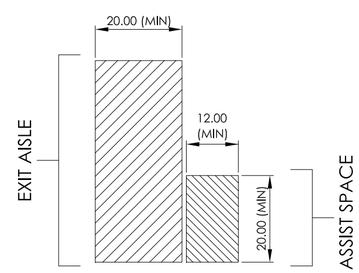

TYPICAL TYPE I DOOR EXIT AISLE & ASSIST SPACE

(IAW TO JAR 25.813 EMERGENCY EXIT ACCESS AND EASE OF OPERATION)

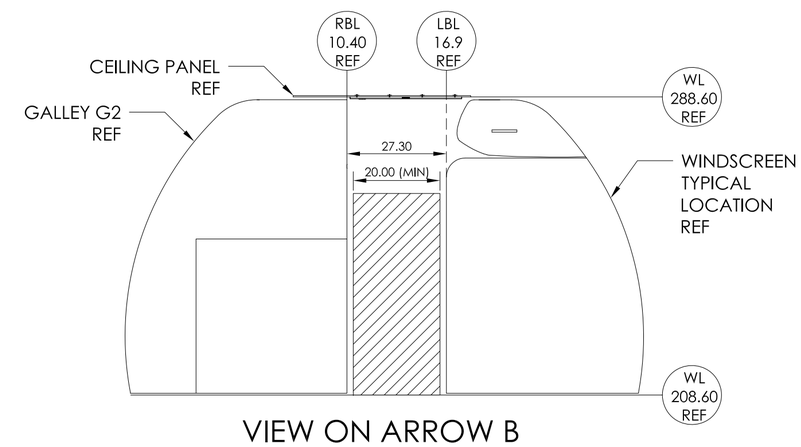

VIEW ON ARROW B

J&C AERO EEU
EASA APPROVAL NO: EASA.21J.580

WWW.THISISDOA.EU
INFO@THISISDOA.EU
PHONE: +353 15 269768

AIRCRAFT: B737-800	MANUFACTURING TOLERANCES: SHEET WORK ±0.010, MACHINING ±0.007, ANGULAR ±0.50° (UNLESS OTHERWISE SPECIFIED)	DRAWN BY: SEE JCAERO/ECN/0537	
MSN: 33622, 33602	REGISTRATION: VQ-BSR, VQ-BSS	SCALE: NTS	SIZE: A2
ALL DIMENSIONS ARE INCHES, THIRD ANGLE PROJECTION	CHECKED BY: SEE JCAERO/ECN/0537		
TITLE: 189 PAX [189Y] LAYOUT OF PASSENGER ACCOMMODATION			
DRAWING NUMBER: SDM252JCAERO0537	SHEET 2 OF 2	REV. A	

© J&C AERO EEU LTD. OWN THE COPYRIGHT OF THIS DRAWING AND IT SHALL NOT BE REPRODUCED BY ANY OTHER WITHOUT THE PRIOR WRITTEN PERMISSION

DOC/302
ISSUE 1.0

DRAWING NUMBER:
SDM252JCAERO0537

F	E	D	C	B	A	DRW REVISION	CHANGES
					INITIAL REVISION	REVISION DSC	
					SEE ECN	REVISION DATE	

QTY.	QTY.	QTY.	MAP REF.	ITEM No.	PART NUMBER	DESCRIPTION	MANU.	CMM		NOTE
								OR REMARKS		
		1		21	GEN-1889-01-000	FWD L/H WINDSCREEN			NEW	7
		1		20	3510A331-32-081	TRIPLE R/H SEAT - NARROW, NO REC	RECARO	25-23-31	EXISTING	6
		1		19	3510A331-31-081	TRIPLE L/H SEAT - NARROW, NO REC	RECARO	25-23-31	EXISTING	6
		1		18	3510A331-32-071	TRIPLE R/H SEAT - NARROW	RECARO	25-23-31	EXISTING	6
		1		17	3510A331-31-071	TRIPLE L/H SEAT - NARROW	RECARO	25-23-31	EXISTING	6
		1		16	3510A331-32-061	TRIPLE R/H SEAT - NARROW	RECARO	25-23-31	EXISTING	6
		1		15	3510A331-31-061	TRIPLE L/H SEAT - NARROW	RECARO	25-23-31	EXISTING	6
		1		14	3510A331-32-221	TRIPLE R/H SEAT - IAT, NARROW	RECARO	25-23-31	EXISTING	6
		1		13	3510A331-31-221	TRIPLE L/H SEAT - IAT, NARROW	RECARO	25-23-31	EXISTING	6
		1		12	3510A331-32-251	TRIPLE R/H SEAT - IAT, NO REC	RECARO	25-23-31	EXISTING	6
		1		11	3510A331-31-251	TRIPLE L/H SEAT - IAT, NO REC	RECARO	25-23-31	EXISTING	6
		1		10	3510A331-32-031	TRIPLE R/H SEAT - STANDARD, NO REC	RECARO	25-23-31	EXISTING	6
		1		9	3510A331-31-031	TRIPLE L/H SEAT - STANDARD, NO REC	RECARO	25-23-31	EXISTING	6
		22		8	3510A331-32-011	TRIPLE R/H SEAT - STANDARD	RECARO	25-23-31	EXISTING	6
		23		7	3510A331-31-011	TRIPLE L/H SEAT - STANDARD	RECARO	25-23-31	EXISTING	6
		1		6	3510A331-32-091	TRIPLE R/H SEAT - NARROW	RECARO	25-23-31	EXISTING	6
		1		5	3510A331-31-091	TRIPLE L/H SEAT - NARROW	RECARO	25-23-31	EXISTING	6
		1		4	3510A331-32-041	TRIPLE R/H SEAT - NARROW	RECARO	25-23-31	EXISTING	6
		1		3	3510A331-31-041	TRIPLE L/H SEAT - NARROW	RECARO	25-23-31	EXISTING	6
		1		2	3510A331-32-211	TRIPLE R/H SEAT - IAT, NARROW	RECARO	25-23-31	EXISTING	6
		1		1	3510A331-31-211	TRIPLE L/H SEAT - IAT, NARROW	RECARO	25-23-31	EXISTING	6
		•			189 PAX [189Y] LAYOUT OF PASSENGER ACCOMMODATION					

NOTES:

1. ALL WORK TO BE CARRIED OUT IN ACCORDANCE WITH BOEING B737-800 AMM AND APPLICABLE PRODUCT(S) CMM.
2. DIMENSIONS OF SEAT POSITIONS ARE TAKEN FROM CENTERLINE OF FRONT FOOT STUD.
3. THIS DRAWING TO BE READ IN CONJUNCTION WITH ENGINEERING ORDER NO. JCAERO/EO/0225-1.
4. INSTALL PLACARDS REFER TO AMM 20-10-14. PLACARDS TO BE AFFIXED IN CLEAR AND PROMINENT LOCATION.
5. FOR AREAS AFFECTED BY THIS CHANGE SEE SHEET 2.
6. INSTALLATION OF ALL EXISTING SEATS IS APPROVED UNDER FL TECHNICS (DESIGN ORGANISATION APPROVAL NO. EASA.21J.496) MINOR CHANGE / REPAIR BULLETIN NO. MCRB-110-01 DRAWING NO. FLT30102014-110-03.
7. FOR INSTALLATION DETAILS OF FWD L/H WINDSCREEN (ITEM 21) REFER TO DRAWING SDM250JCAERO0540.

FUNCTIONALITY AND CONFORMITY CHECKS

8. CHECK ALL "NO SMOKING" AND "FASTEN SEAT BELTS" SIGNS ARE CLEARLY VISIBLE IAW AIPC/AMM.
9. CHECK THAT MINIMUM DISTANCE FROM SEAT REFERENCE POINT TO BULKHEAD IS GREATER THAN 35.00 INCHES. LITERATURE POCKETS INSTALLED ON BULKHEADS 18.00 INCHES OR GREATER ABOVE THE TOP OF THE SEAT TRACK ARE CONSIDERED WITHIN THE HEAD STRIKE AREA.
10. CHECK THAT THE ASSIST SPACE AT TYPE I EMERGENCY EXITS IS A MINIMUM OF 12.00 x 20.00 INCHES.
11. CHECK THAT TYPE I EXITS TO HAVE ASSIST SPACE ONE SIDE OF EXIT PASSAGEWAY ONLY; ASSIST SPACE NOT TO OBSTRUCT EXIT PASSAGEWAY.

TABLE 2

DESCRIPTION	ABBREVIATION
LEFT HAND	L/H
RIGHT HAND	R/H
IN-ARM TABLE	IAT
CTR	CENTER
NO RECLINE	NO REC
AFT	AFTWARD

TABLE 1

SYMBOL	DESCRIPTION	ABBREVIATION
	SEAT ASSY UNSUITABLE FOR H/CAP PAX	---
	SEAT WITH IN ARM TRAY	IAT
	NO ARMREST	NO ARM
	NO FOODTRAY	NO FD
	SEAT WITH NO BREAK OVER	NO B/OVR
	SEAT WITH NO RECLINE	NO REC
	LITERATURE POCKET	LIT POC

J&C AERO EEU
EASA APPROVAL NO: EASA.21J.580

WWW.THISISDOA.EU
INFO@THISISDOA.EU
PHONE: +353 15 269768

AIRCRAFT: B737-800
MANUFACTURING TOLERANCES: SHEET WORK ±0.010, MACHINING ±0.007, ANGULAR ±0.50° (UNLESS OTHERWISE SPECIFIED)
DRAWN BY: SEE JCAERO/ECN/0537
MSN: 33622, 33602
REGISTRATION: VQ-BSR, VQ-BSS
SCALE: NTS
SIZE: A2
ALL DIMENSIONS ARE INCHES
THIRD ANGLE PROJECTION
CHECKED BY: SEE JCAERO/ECN/0537
TITLE: 189 PAX [189Y] LAYOUT OF PASSENGER ACCOMMODATION
DRAWING NUMBER: SDM252JCAERO0537
SHEET 1 OF 2
REV. A

© J&C AERO EEU LTD. OWN THE COPYRIGHT OF THIS DRAWING AND IT SHALL NOT BE REPRODUCED BY ANY OTHER WITHOUT THE PRIOR WRITTEN PERMISSION